Instruction Fetch

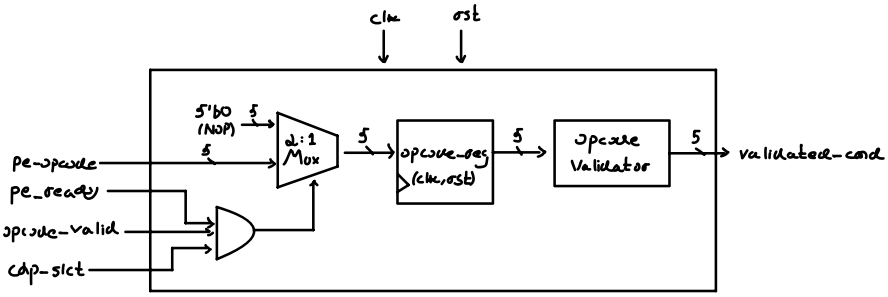

Instruction Decode

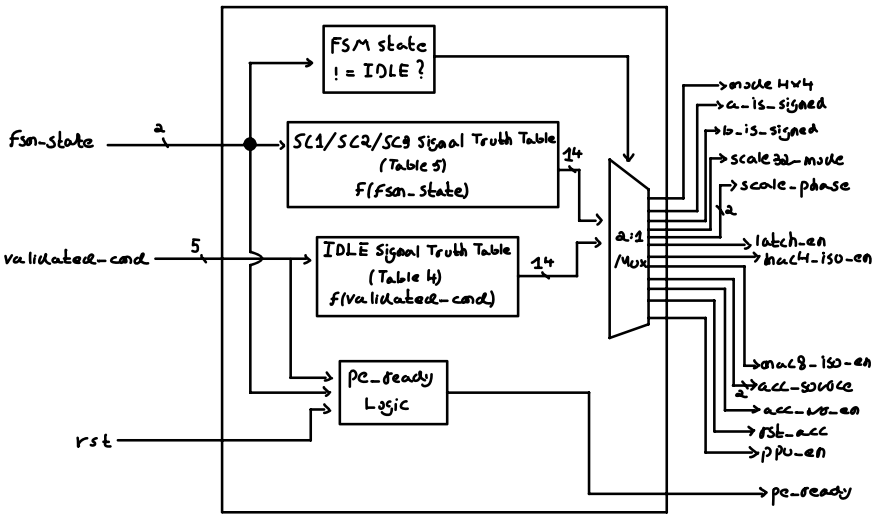
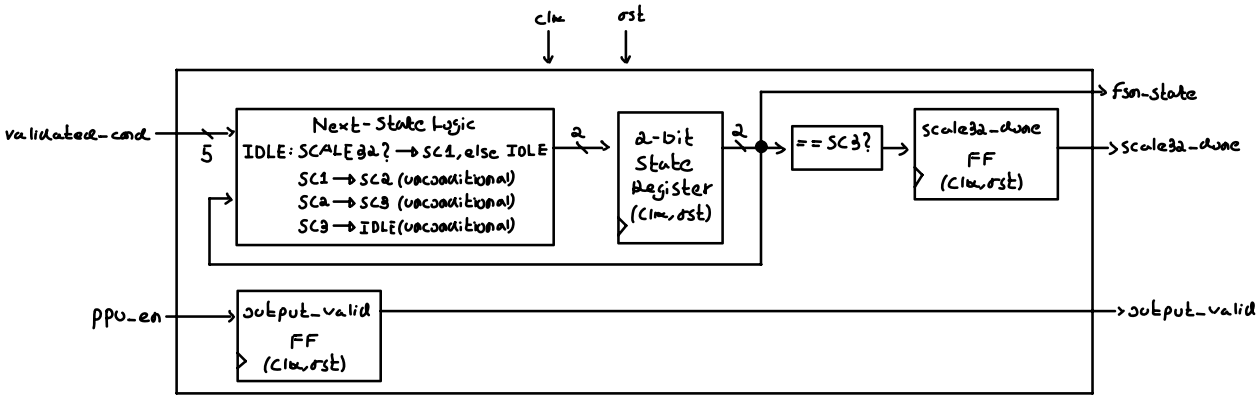
SCALE32 Sequencer